# Enquiry for Brushes with Shank

**Drawing / description of application**

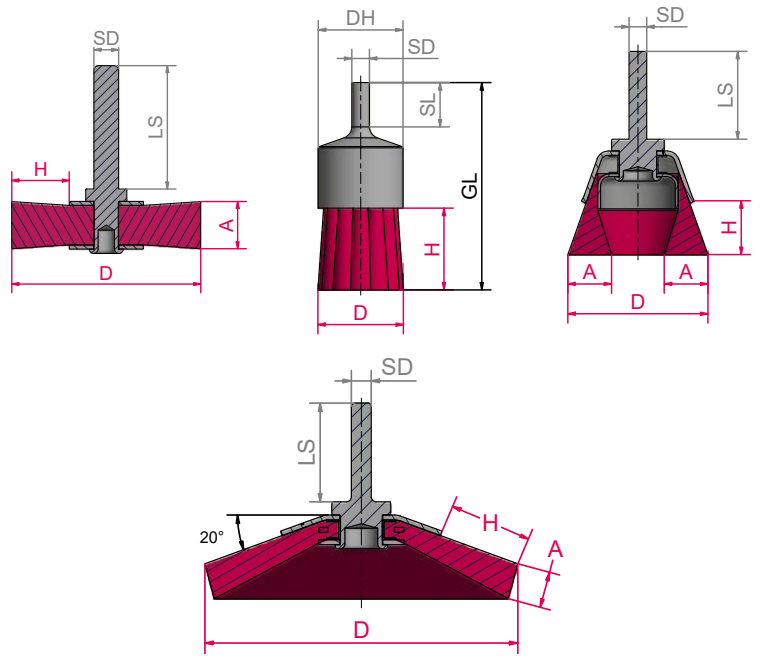


**Sender:** Company, contact person

**Piece number** _____

**Brush Application** ☐ dry ☐ wet

- ☐ derusting
- ☐ removing paint
- ☐ deburring
- ☐ cleaning
- ☐ roughening / structuring
- ☐ weld dressing
- ☐ others _____

**Material to be treated** ____°C Temperature

- ☐ steel
- ☐ aluminium
- ☐ wood
- ☐ stainless steel
- ☐ plastic
- ☐ others _____

**Filling material**

- ☐ crimped ☐ knotted
- ☐ steel
- ☐ brass coated steel
- ☐ brass
- ☐ stainless steel
- ☐ polyamide
- ☐ silicon carbide bristles (SIC)

**Diameter of filling material** _____

**Please indicate the dimensions according to the technical drawing (mm):** (shank standard 6 mm)

| | | | |
|---|---|---|---|
| D | Diameter | _____ | mm |
| H | trim hight | _____ | mm |
| A | working width | _____ | mm |
| GL | overall length | _____ | mm |
| DH | Housing diameter | _____ | mm |

**Used machine**

- ☐ hand-operated machine (e.g. angle grinders)_____
- ☐ stationary machine (z.B. CNC)_____
- ☐ others _____

**machine data**

max. speed _____


**Inquiries and Infos:**
Phone: +49 9082 707-0 info@lessmann.com
Fax: +49 9082 707-76 www.lessmann.com