Enquiry for High Performance Filament Brushes

Drawing / description of application

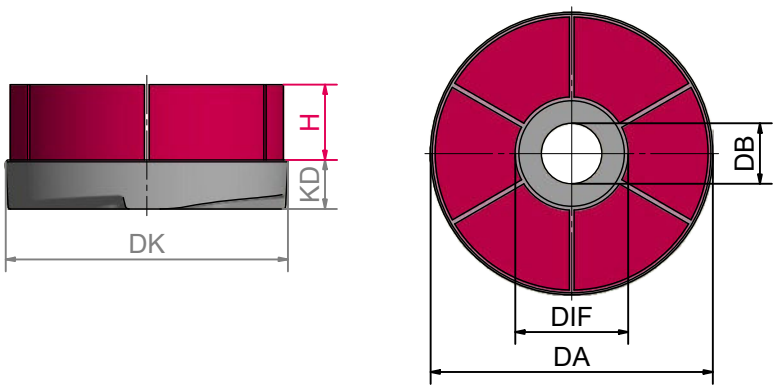

Sender: company, contact person

Piece number _____

Brush Application ☐ dry ☐ wet

☐ deburring

☐ others _____

Material to be treated ____°C Temperature

☐ steel

☐ aluminium

☐ stainless steel

☐ others _____

Filling material

☐ silicon carbide bristles (SIC)

☐ aluminium oxide bristles (AO)

☐ ceramic grit (KK)

☐ diamond grit (DIA)

Diameter of filling material _____

filling placement

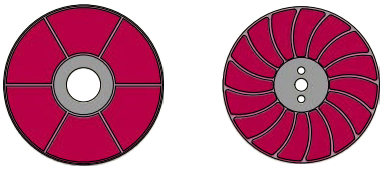

☐ full-body ☐ turbo

turbo right / left (standard right) _____

Please indicate the dimensions according to the technical drawing (mm):

DK body diameter _____ mm

DA Dia filament outside _____ mm

DIF Dia filament inside _____ mm

H Filling height _____ mm

Deviation of the bristles _____ °

☐ Standard bore

(adapted to body diameter, see table on left page

☐ Special bore _____

Inquiries and Infos:
Phone: +49 9082 707-0 info@lessmann.com
Fax: +49 9082 707-76 www.lessmann.com